Electronics

Original Desktop Filament Extruder MK1 by ARTME 3D
Version 15.06.22

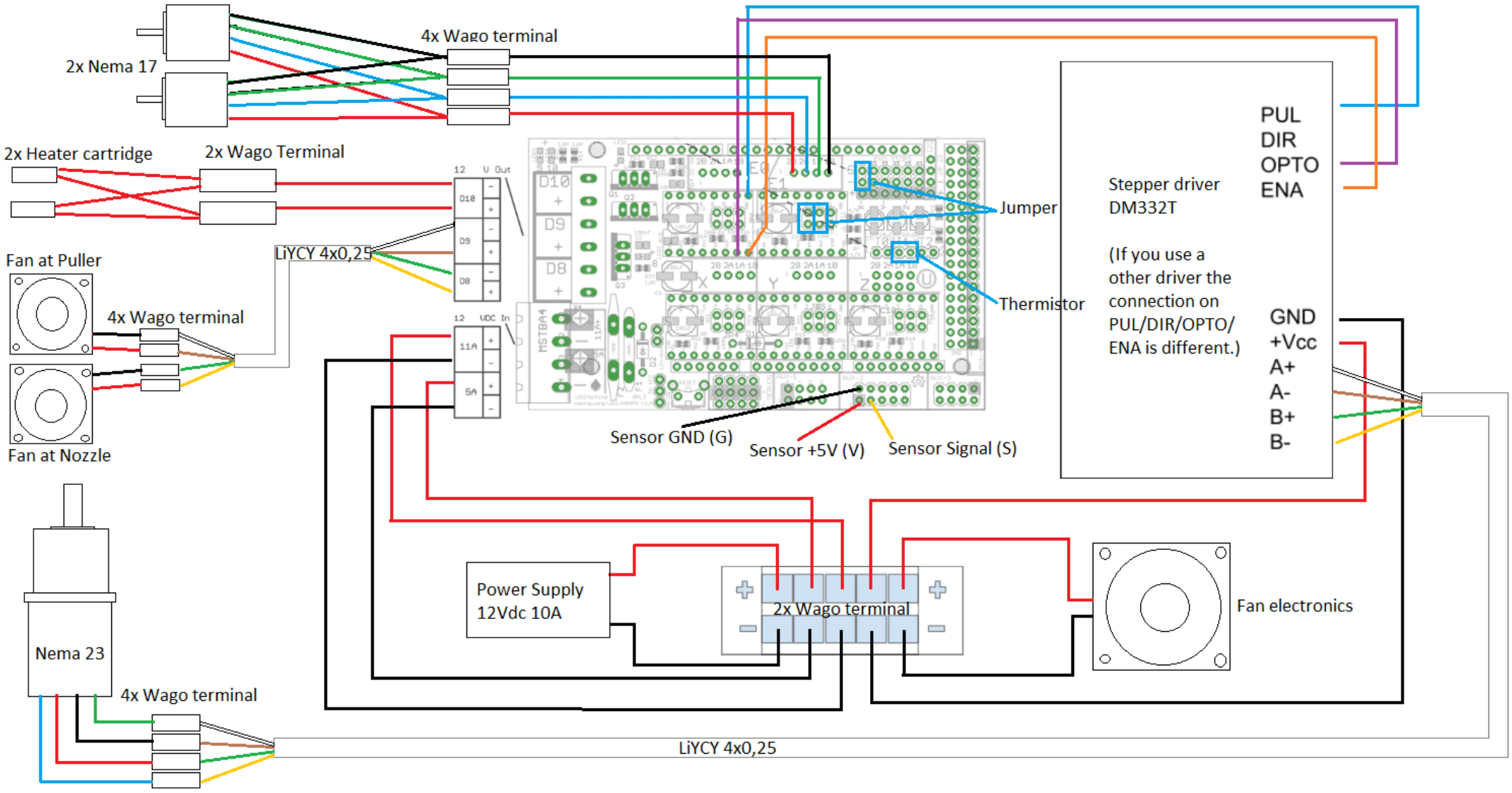

This document is published under a CC BY-SA license.(https://creativecommons.org/licenses/by-sa/4.0/)